LEFOO

LFP404/DB DC Motor Peristaltic Pump

Color X6

FEATURES

- Large flow
- Low noise
- Long life
- Can transport viscous media in large quantities

APPLICATION INDUSTRY

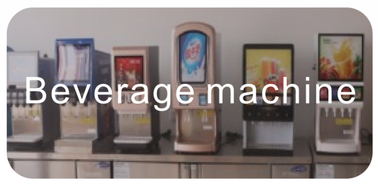

SPECIFICATIONS

Model	Installation Method	Motor Type	Control Method	Function	Working Voltage	Power	Weight	Working Environment	Rollers
P404DB	Stainless steel mounting plate as standard (customizable)	Brush DC motor	Power-on operation	Fixed flow rate	DC12V、DC24V	≤36W	650g	Temperature 0-45℃, Relative Humidity <85%RH	Standard with 2 rollers+ 2 training wheels

FLOW RATE：ml/min

Voltage	Flow Range	Tube Size	Tube Type
DC12V、DC24V	1965～2900	35#	BPT Tube/Silicone Tube/A60-F/Viton Tube
	2800～4200	36#	

MOUNTING DIMENSION：mm

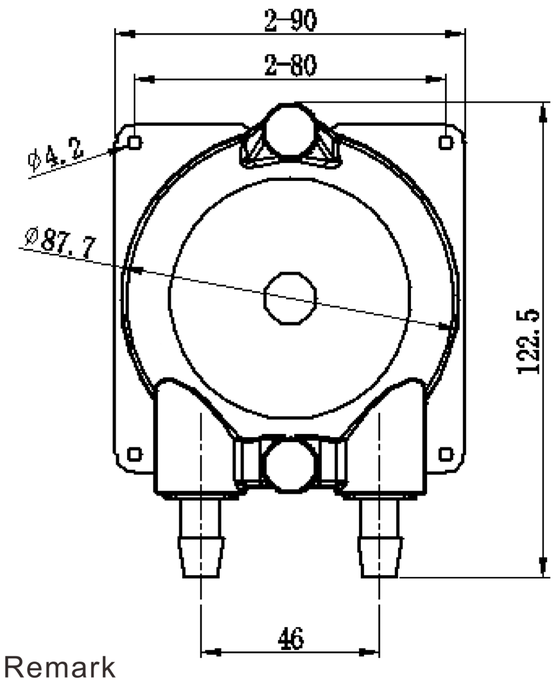

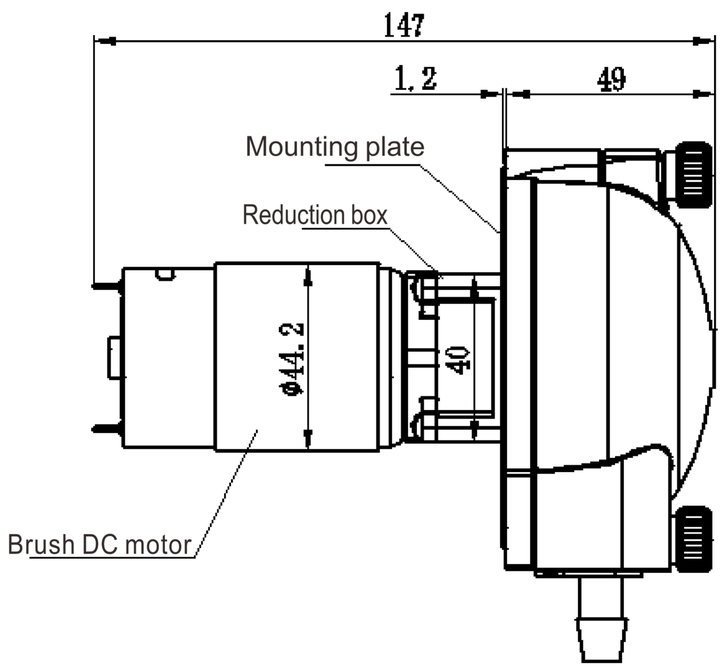

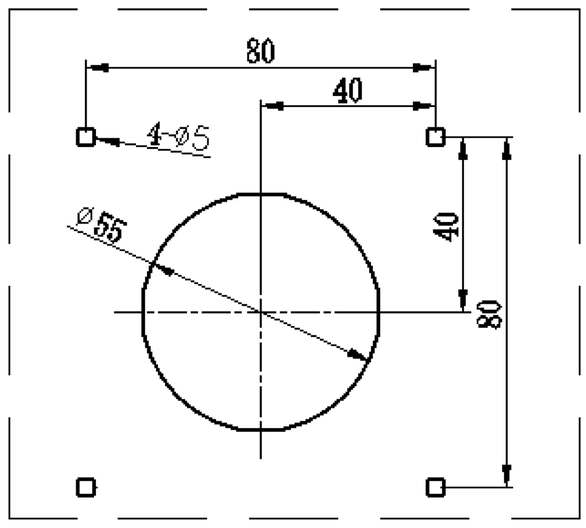

Installation hole diagram

Remark

1.The above flow parameters are tested under the conditions of room temperature 23°C, standard atmospheric pressure, clean water, suction lift 0.2m, lift 0, and no pressure. For reference only.

2. Pump flow rate can be affected by viscosity, density, medium temperature, ambient temperature,inlet and outlet pressure, suction lift and lift of pump. To ensure the accuracy of the pump, it is necessary to keep the above factors without significant changes.