LEFOO

LFP601/DB DC Motor Peristaltic Pump

Color X6

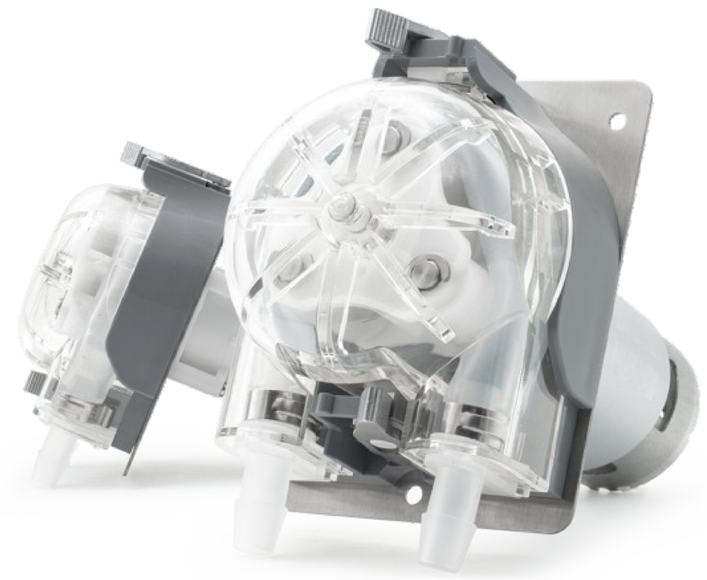

FEATURES

- The pump head with new quick disassembly and assembly structure, stable and reliable, convenient to repair and maintain
- Compact structure, single pump takes up less space
- Compatible to multiple specifications of tubes, covering a wide range of flow rates
- Transparent pump cover allows for real-time monitoring of pump operation
- Installation method can be customized

APPLICATION INDUSTRY

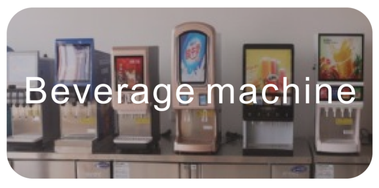

SPECIFICATIONS

Model	Installation Method	Motor Type	Control Method	Function	Working Voltage	Power	Weight	Working Environment	Rollers
P601DB	Stainless steel mounting plate as standard (customizable)	Brush DC motor	Power-on operation	Fixed flow rate	DC12V、DC24V	≤32W	670g	Temperature 0-45℃, Relative Humidity <85%RH	Standard with 3 rollers

FLOW RATE：ml/min

Voltage	Flow Range	Tube Size	Tube Type
DC12V、DC24V	330～1915	26#	BPT Tube/Silicone Tube/A60-F/Viton Tube
	560～2930	35#	
	725～4200	36#	

MOUNTING DIMENSION：mm

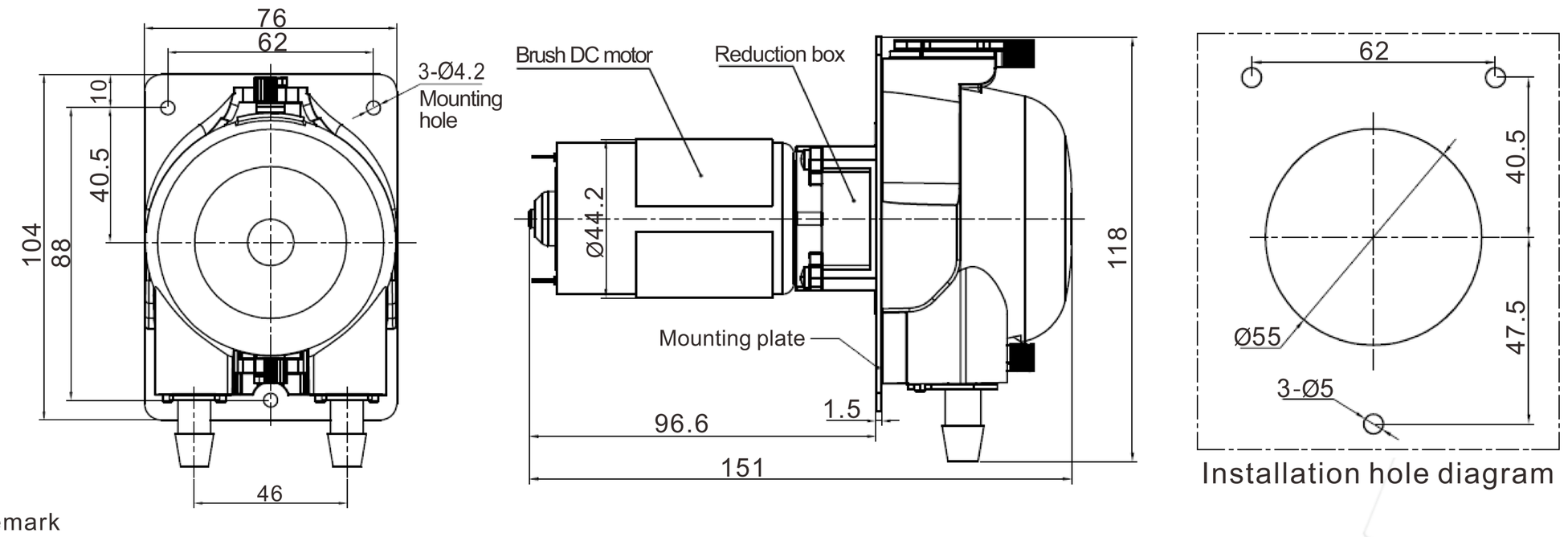

Remark

1.The above flow parameters are tested under the conditions of room temperature 23°C, standard atmospheric pressure, clean water, suction lift 0.2m, lift 0, and no pressure. For reference only.

2. Pump flow rate can be affected by viscosity, density, medium temperature, ambient temperature,inlet and outlet pressure, suction lift and lift of pump. To ensure the accuracy of the pump, it is necessary to keep the above factors without significant changes.