LEFOO

LFP501/DB DC Motor Peristaltic Pump

Color X6

FEATURES

- High precision, long lifetime, durable
- Straight tube installation method to avoid residual stains (straight, U-shaped, L-shaped are available)
- Waterproof pump head prevents water from entering the motor
- Whole detachable pump head , convenient for tube replacement and maintenance
- Low noise, smooth operation, fine-tunable pressure tube to avoid dripping

APPLICATION INDUSTRY

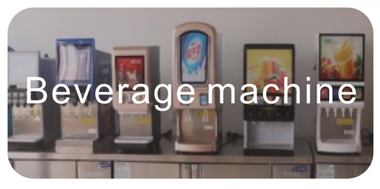

SPECIFICATIONS

Model	Installation Method	Motor Type	Control Method	Function	Working Voltage	Power	Weight	Working Environment	Rollers
P501DB	Built-in mounting hole	Brush DC motor	Power-on operation	Fixed flow rate	DC12V、DC24V	≤24W	640g	Temperature 0-45℃, Relative Humidity <85%RH	Standard with 3 rollers

FLOW RATE：ml/min

Voltage	Flow Range	Tube Size	Tube Type
DC12V、DC24V	990～1600	24#	BPT Tube/Silicone Tube/A60-F/Viton Tube
	1480～2550	35#	
	1800～2800	36#	

MOUNTING DIMENSION：mm

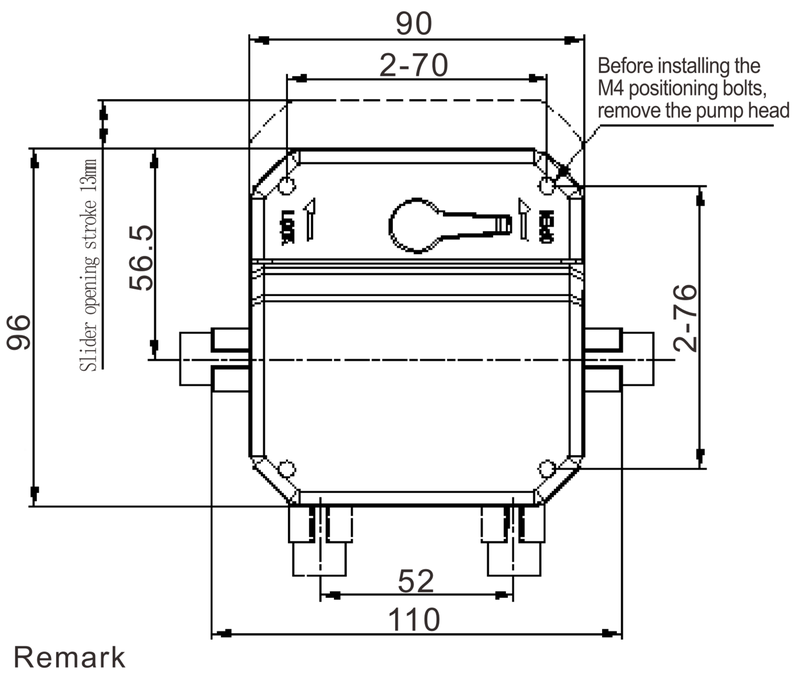

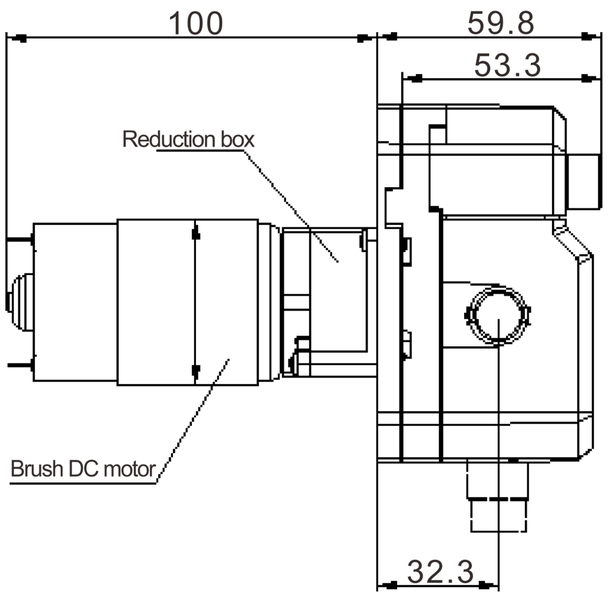

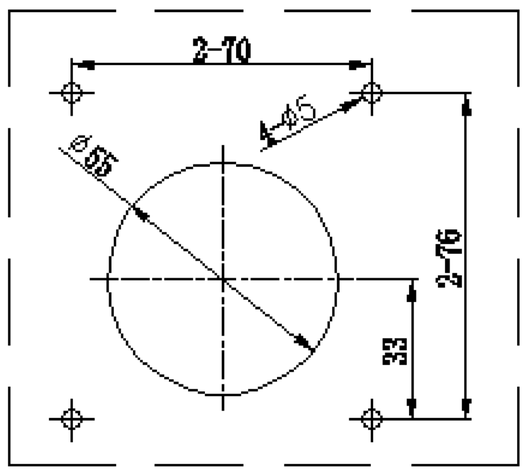

Installation hole diagram

Remark

1.The above flow parameters are tested under the conditions of room temperature 23°C, standard atmospheric pressure, clean water, suction lift 0.2m, lift 0, and no pressure. For reference only.

2. Pump flow rate can be affected by viscosity, density, medium temperature, ambient temperature,inlet and outlet pressure, suction lift and lift of pump. To ensure the accuracy of the pump, it is necessary to keep the above factors without significant changes.