LEFOO

LFP502/DB DC Motor Peristaltic Pump

Color X6

FEATURES

- Pioneers the integrated design of dual pump heads
- Features high flow accuracy and excellent airtightness
- Equipped with a stable and reliable quick-release structure
- Saves installation and layout space
- Customizable installation methods

APPLICATION INDUSTRY

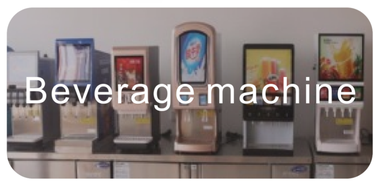

SPECIFICATIONS

Model	Installation Method	Motor Type	Control Method	Function	Working Voltage	Power	Weight	Working Environment	Rollers
P502DB	Body Holes (Expandable)	Brush DC motor	Power-on operation	Fixed flow rate	DC12V、DC24V	≤28W	740g	Temperature 0-45℃, Relative Humidity <85%RH	Standard with 3 rollers+3 training wheels

FLOW RATE：ml/min

Voltage	Flow Range	Tube Size	Tube Type
DC12V、DC24V	950～2400	35#	BPT Tube/Silicone Tube/A60-F/Viton Tube
	1200～2950	36#	

MOUNTING DIMENSION：mm

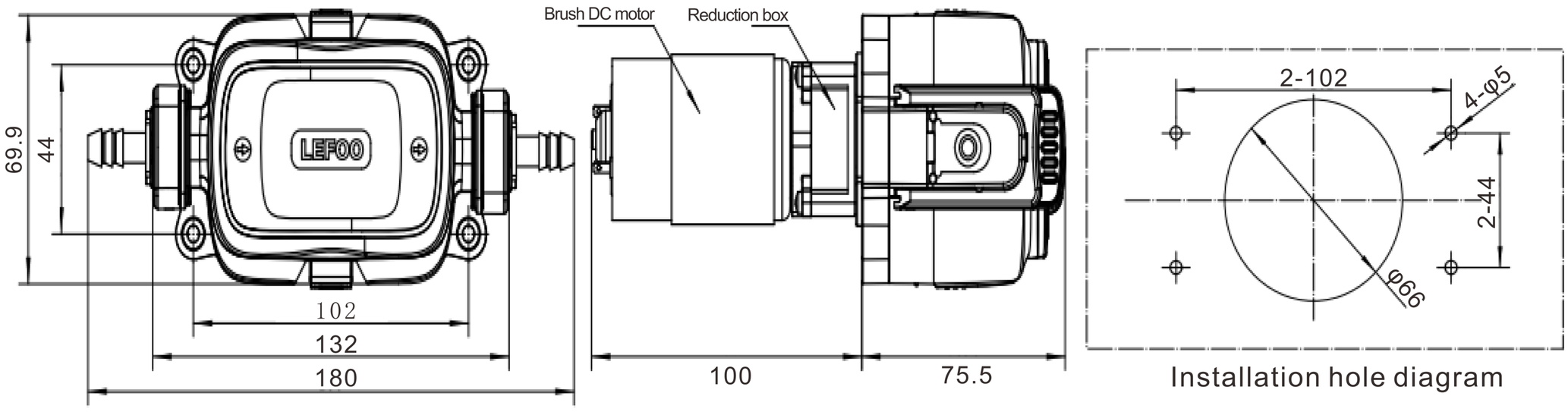

Remark

1.The above flow parameters are tested under the conditions of room temperature 23°C, standard atmospheric pressure, clean water, suction lift 0.2m, lift 0, and no pressure. For reference only.

2. Pump flow rate can be affected by viscosity, density, medium temperature, ambient temperature,inlet and outlet pressure, suction lift and lift of pump. To ensure the accuracy of the pump, it is necessary to keep the above factors without significant changes.