LIQUID-COOLED SUPERCHARGE SERIES

Flow Curve

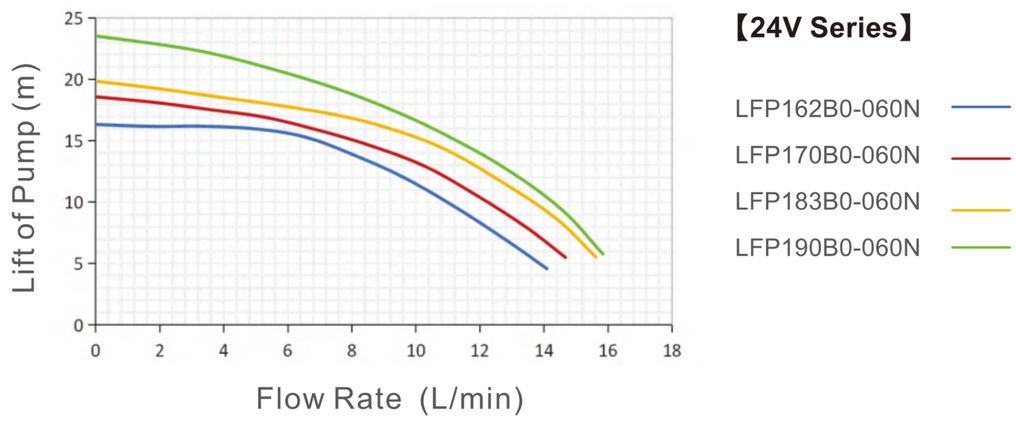

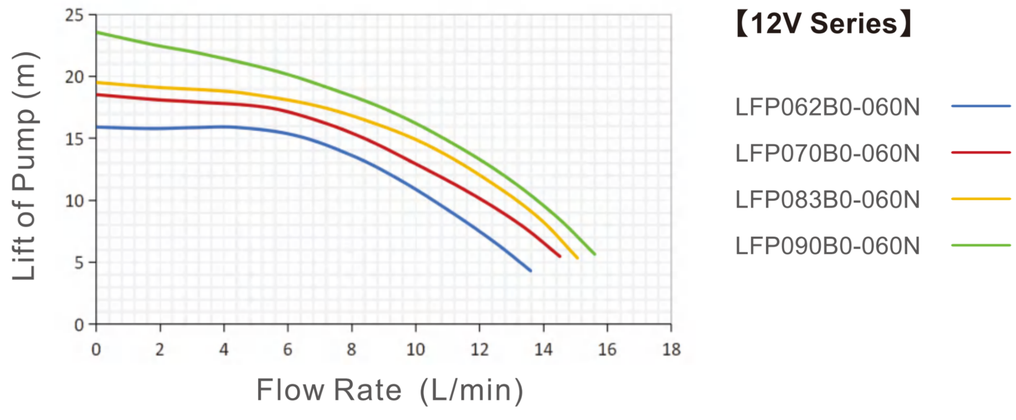

Working Conditions

Ambient temperature : -20~+40℃	Rated voltage : 12VDC or 24VDC	Insulation grade : Grade F	IP grade : IP67
Medium temperature : -20~+60℃	Voltage range : 10~18VDC or 16~28VDC	Lifetime: 20000H	Medium : Water or ethylene glycol

Connections : Inlet DN15, Outlet DN8. Outlet and Inlet size can be customized as per request.

Controls : FG Signal, 0-5V speed regulation, PWM speed regulation (Optional)

Specifications

Model	Rated Voltage (VDC)	Max.Flow Rate (L/min)	Max.Lift of Pump (m)	Max.Current (A)	Max.Power (W)
LFP062B0-060N	12	14	16	5.2	62
LFP070B0-060N	12	15	18	5.8	70
LFP083B0-060N	12	15	20	6.9	83
LFP090B0-060N	12	15	24	7.5	90
LFP162B0-060N	24	14	16	2.6	62
LFP170B0-060N	24	15	18	2.9	70
LFP183B0-060N	24	15	20	3.5	83
LFP190B0-060N	24	15	24	3.8	90

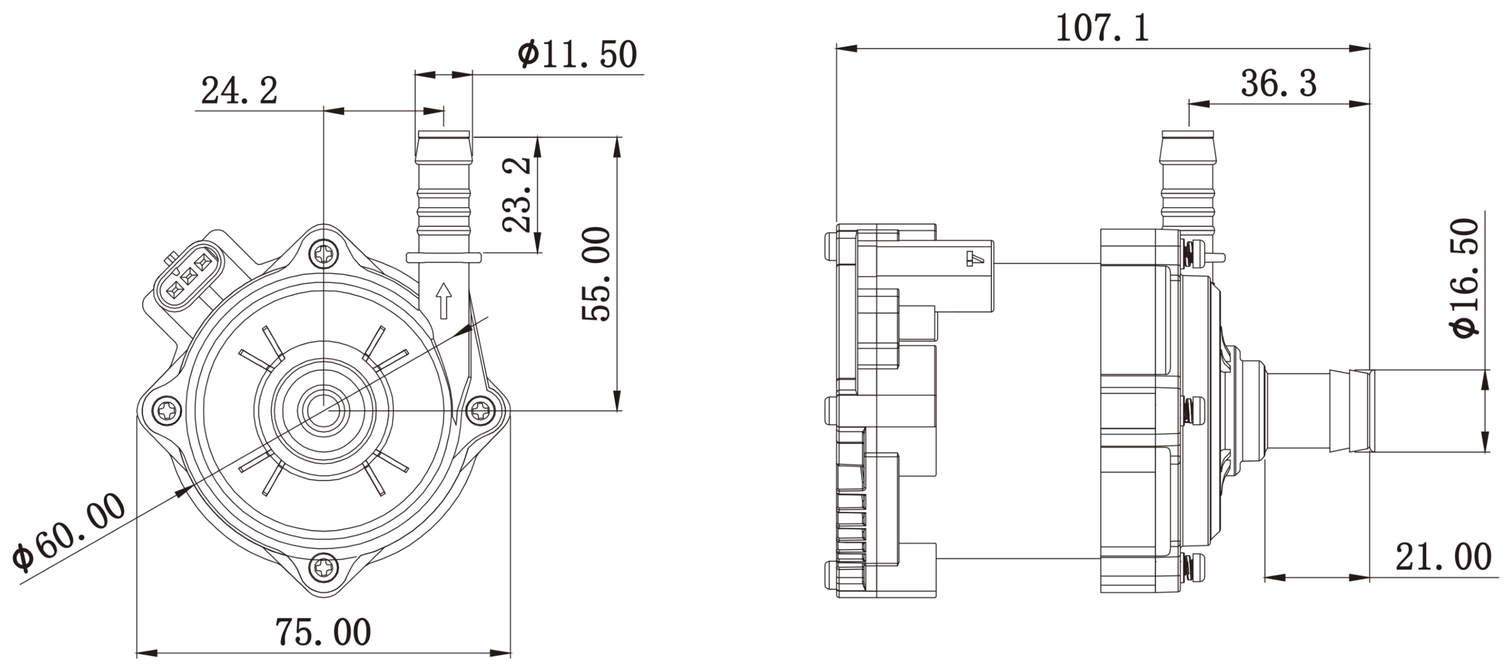

【The company has the right of final interpretation. The content of the product information is updated in real time. Please contac tour company to confirm before purchasing.】